Installation & Owner's Manual

AprilAire®

Models

U161, U171, U162 & U172

Easy Install™ Whole-House Air Cleaners

Model U161

Model U171

Model U162

Model U172

Table of Contents

Safety Instructions 2

Specifications 2

Dimensions 2

Install the Air Cleaner Cabinet 3

- Locating the Air Cleaner 3
- Easy to Install Air Cleaner Features 3
- Installation 5

Performance 6

- Aprilaire 10-Year Clean Coil Commitment 6

Operation 6

Maintenance 6

- Changing the Filters 6

Limited Warranty 7

Product Info & Digital Manual

READ AND SAVE THESE INSTRUCTIONS

Safety Instructions

⚠ WARNING

- **ATTENTION INSTALLER:** Read this manual before installing. Improper installation or maintenance may cause property damage or injury. It is recommended that installation, service, and maintenance be performed by a trained service technician. This product must be installed in compliance with all local, state, and federal codes.
- **ELECTRIC SHOCK HAZARD:** 120 volts may cause serious injury from electric shock. Disconnect electrical power to the HVAC system before starting installation or servicing. Leave power disconnected until installation/service is completed.

⚠ CAUTION

- **SHARP EDGES MAY CAUSE INJURY FROM CUTS.** Use care when cutting plenum openings and handling ductwork. Always wear glasses/goggles and gloves when installing the unit.
- Dropping may cause personal injury or equipment damage. Handle with care and follow installation instructions.

NOTICE

EQUIPMENT DAMAGE MAY OCCUR IF INSTALLATION INSTRUCTIONS ARE NOT FOLLOWED.

- Do not install the air cleaner on the warm air supply or in an area where the temperature may exceed 140°F. This may include areas above heat exchangers in downflow furnaces or above exhaust flues in lowboy furnace cold air returns.
- Do not install air cleaner downstream of a UV light. UV lamps will cause degradation of the filtering media.

Specifications

	AIR CLEANER MODEL	
	U161 & U171	**U162 & U172**
Replacement Air Filter Model	3F411, 3F413, 3F413CBN, 3F416	3F211, 3F213, 3F213CBN, 3F216
Airflow Capacity	Up to 2000 CFM maximum	
Air Cleaner Operating Environment	**Temperature:** 0°F–140°F; **Humidity:** 0-90% non-condensing	

Dimensions (inches)

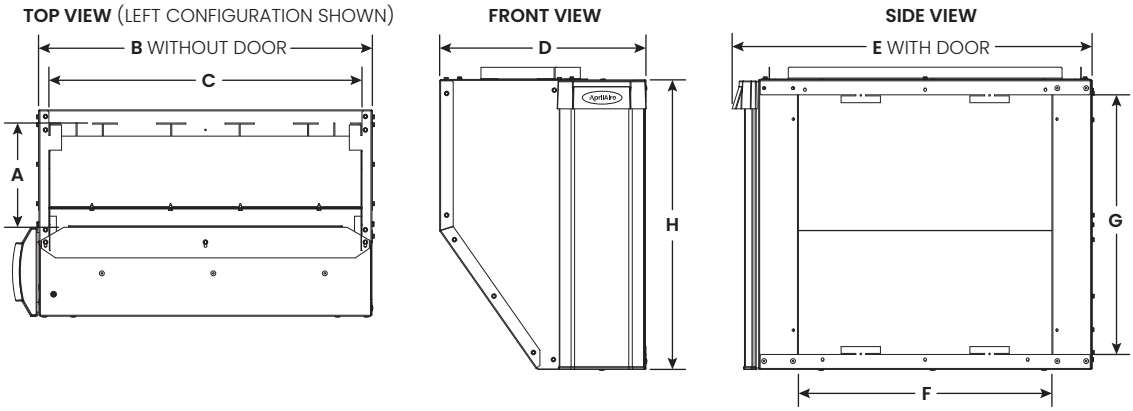

MODEL	A	B	C	D	E	F	G	H
U161 & U171	8-3/32″ to 10-3/32″	28-3/16″	23-7/8″	15-11/16″	30-3/16″	22″	15-1/2″	17-13/16″
U162 & U172	8-3/32″ to 10-3/32″	25-3/8″	21-3/32″	15-11/16″	27-3/8″	19-5/16″	19-3/4″	22-1/8″

Install the Air Cleaner Cabinet

LOCATING THE AIR CLEANER

1. Each air cleaner model is designed for one specific orientation only—either a left-return drop or a right-return drop, not both (**FIGURE 1**).
2. Leave sufficient space for the removal of the filtering media (**FIGURE 2**).

FIGURE 1

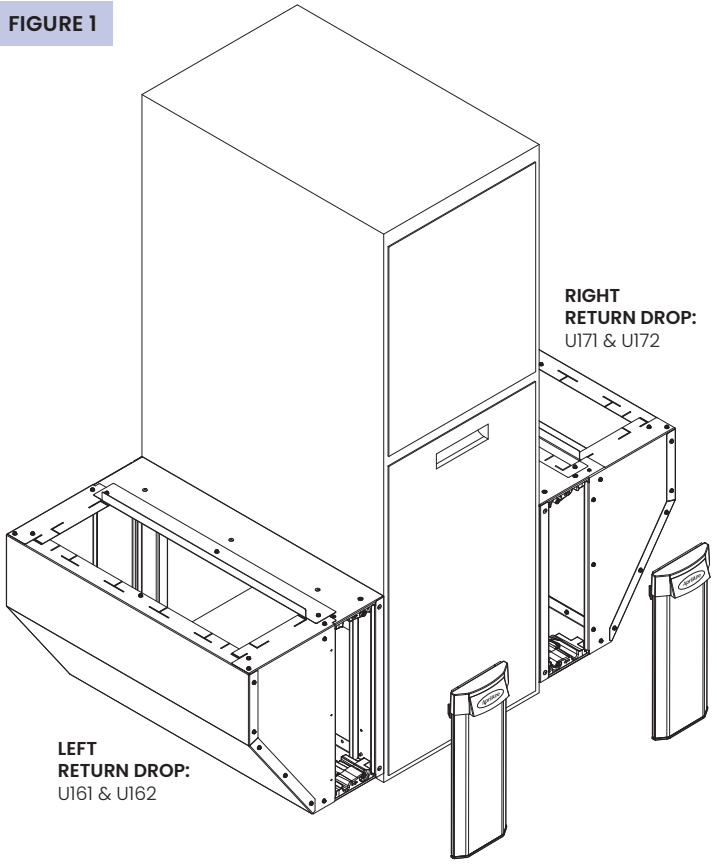

FIGURE 2

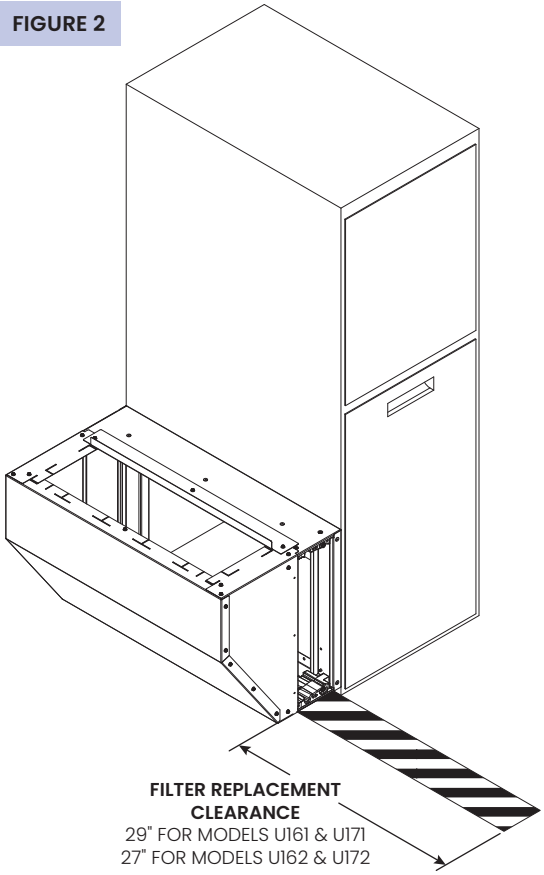

EASY TO INSTALL AIR CLEANER FEATURES

The air cleaner has many features to make installation easier:

1. The cold air return opening is adjustable between 8" and 10". This is done by bending up the appropriate tabs. The 8" dimension can be offset to the right or left by moving the **L bracket** to either side to match up with the location of the return drop (**FIGURES 3 & 4**).

FIGURE 3: 8" x 24" OFFSET RIGHT

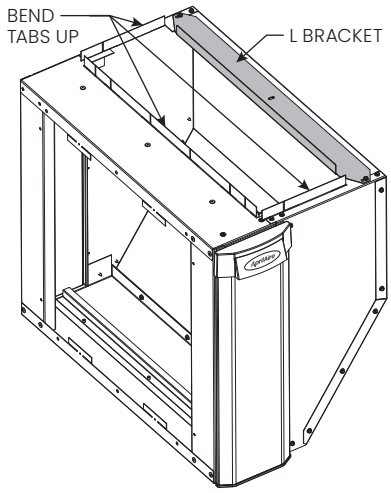

FIGURE 4: 8" x 24" OFFSET LEFT

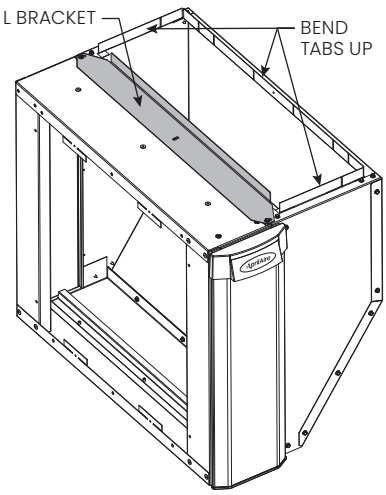

2. The "L" bracket can removed to form a 10"x 24" drop opening (**FIGURE 5**).

3. If the cold air drop is less than 24 inches deep an angle bracket can be field fabricated and installed to reduce the drop width (**FIGURE 6**).

4. The cold air return can be moved into position over the top of the air cleaner (**FIGURE 7**) or transition pieces field fabricated (**FIGURE 8**).

5. Four tabs are located on the outlet side of the air cleaner. These tabs can be bent into the cold air return opening on the HVAC equipment to hold the air cleaner in position during installation (**FIGURE 9**).

FIGURE 5

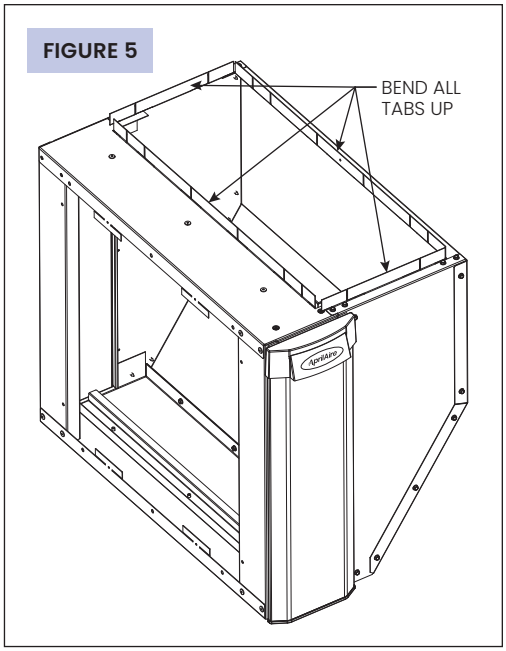

FIGURE 6

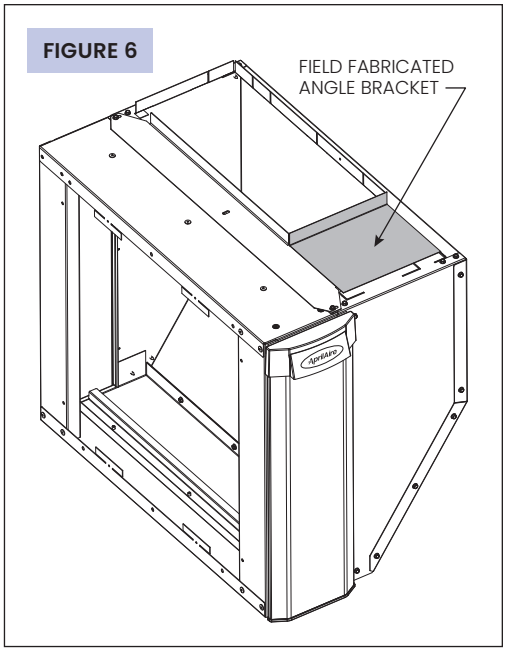

FIGURE 7

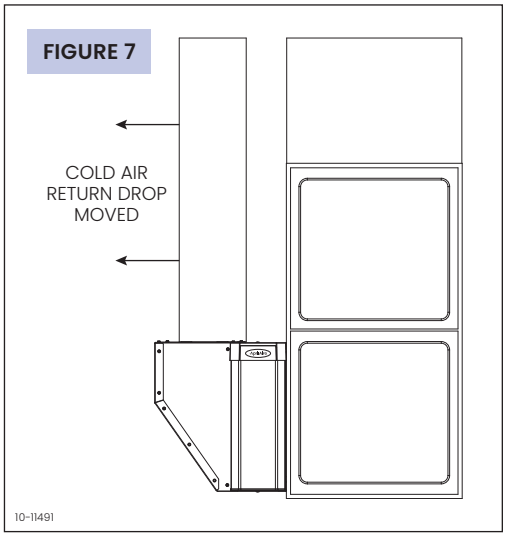

FIGURE 8

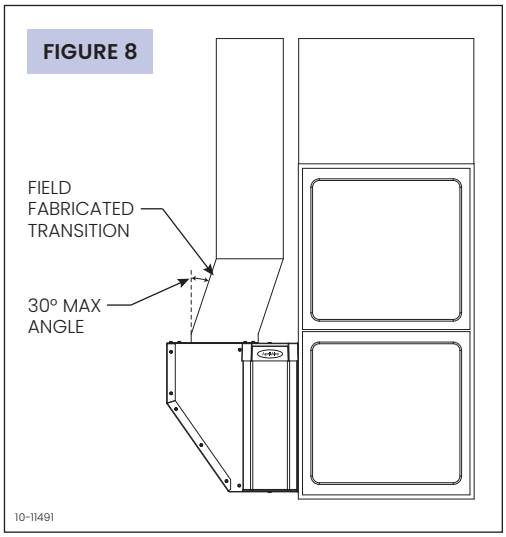

FIGURE 9

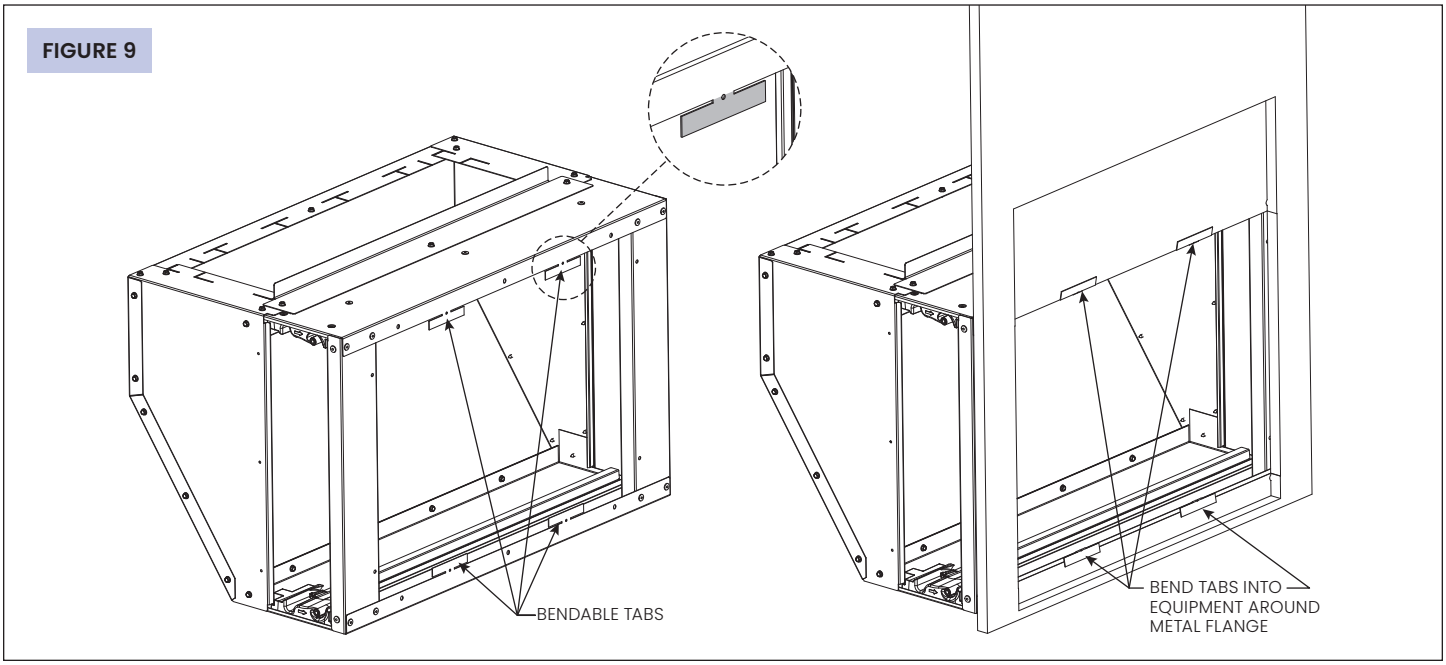

INSTALLATION

1. Disconnect power to the furnace or air handler at the electrical service panel.

⚠ WARNING

ELECTRIC SHOCK HAZARD: 120 volts may cause serious injury from electric shock. Disconnect electrical power to the HVAC system before starting installation or servicing. Leave power disconnected until installation/service is completed.

2. Remove the air cleaner door from the outer housing and pull out the filter (see **FIGURE 10**).
3. If replacing an existing filter, remove the filter and thoroughly clean the blower compartment.
4. Determine the cold air return drop sizing and location and bend up tabs on the top of the air cleaner cabinet accordingly.
5. Use the tabs to fix the air cleaner cabinet to the opening in the furnace. Use screws (field supplied) to mount the unit to the furnace/air handler.
6. Mount the return ductwork over the bent-up flanges on the top of the air cleaner cabinet with sheet metal screws (field supplied).
7. Seal all connections using mastic, foil tape, or silicone based caulk.
8. Expand and install the filter (see **FIGURE 11**).
9. Install the door.
10. Reconnect power to the furnace or air handler at the electrical service panel.

FIGURE 10

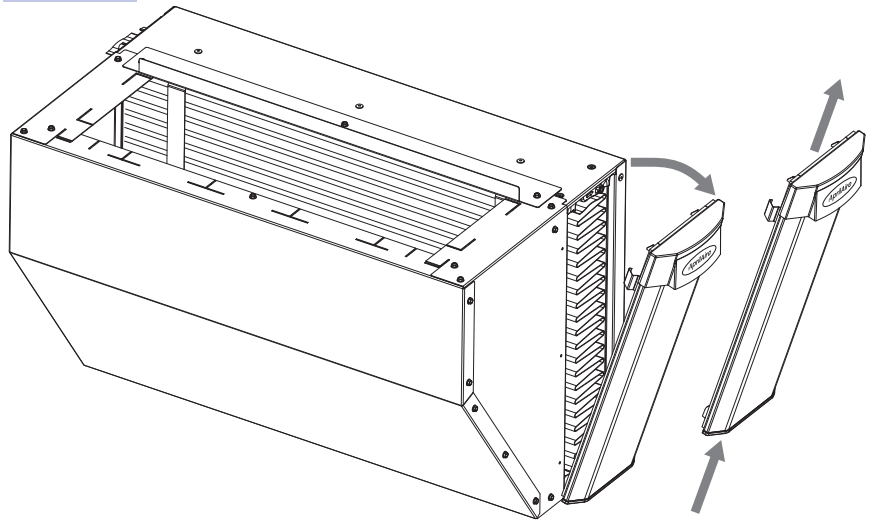

FIGURE 11

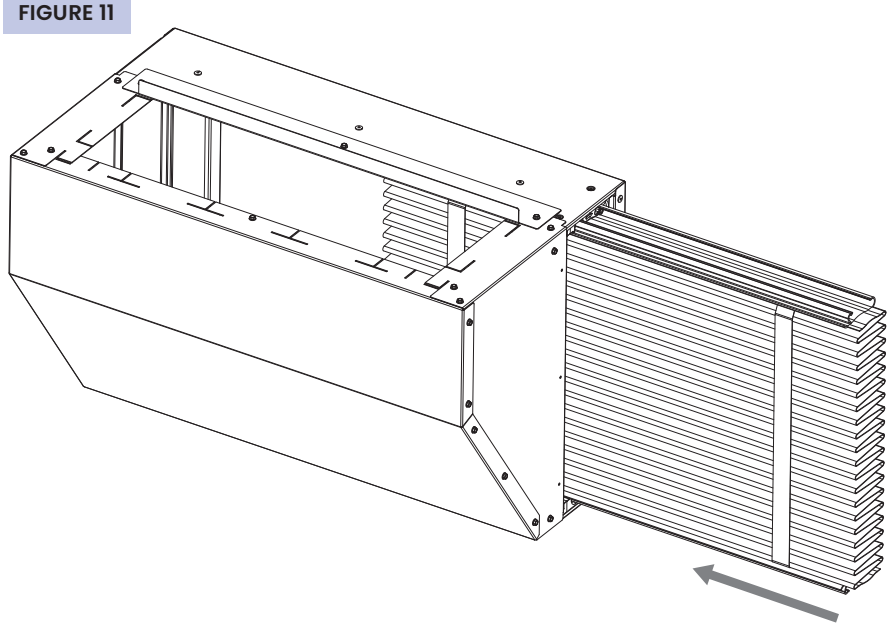

Performance

When you choose a genuine AprilAire Whole-House Air Cleaner, you're choosing Healthy Air. Your air cleaner is specifically designed to work with your AprilAire Air Filter to remove harmful particulates from your home's air such as mold, pet dander, airborne viruses, pollen, and odors.

AprilAire Air Filters provide industry-leading performance and life with TriPure™ Technology—advanced purification, lowest static pressure[1], and long filter life. TriPure™ Technology delivers cleaner air with advanced filtration media, optimized airflow for the lowest static pressure, and long-life performance that protects HVAC systems and homeowners.

Each filter is expertly engineered for a seamless, secure fit within your AprilAire Whole-House Air Purifier, ensuring optimal filtration and reliable performance.

Our patented Self-Seal Technology reduces bypass, improving filter performance and providing superior protection of your home and Indoor Air Quality health.

The patented AprilAire Air Filter works without assembly or reinforcements within the Self-Aligning Rail System.

APRILAIRE 10-YEAR CLEAN COIL COMMITMENT

CLEAN-COIL COMMITMENT

AprilAire Whole-House Air Purifiers with genuine AprilAire Air Filters are so effective at removing airborne particulates that are harmful to your family and HVAC equipment that we offer you this guarantee.

Should your new indoor air conditioning coil require professional cleaning in the next 10 years while properly using an AprilAire Air Purifier, we will pay $250 toward the cost of having the indoor coil cleaned by a licensed contractor.*

*This commitment applies to new HVAC equipment with a new indoor air conditioner coil (less than six months old) installed with an AprilAire Air Purifier. The AprilAire Air Purifier must be installed by a licensed HVAC contractor and properly maintained as directed in the owner's manual including use of only AprilAire Air Filters. For redemption details, please call **800.334.6011**.

Operation

An AprilAire Whole-House Air Cleaner is installed by your contractor as one of the components in your heating, ventilation, and air conditioning (HVAC) system to clean the air that circulates through your home. When the HVAC equipment turns on, the air in your home travels through the registers and return duct(s) to the HVAC equipment where it is conditioned and sent back into the rooms of your house through the supply ducts.

Airborne contaminants in the home include those from natural sources such as dust and pollen and from man-made sources such as tobacco smoke or exhaust. Removing these particles keeps the HVAC equipment components clean and, more importantly, helps ensure Healthy Air throughout the entire home.

Continuous air cleaning with your AprilAire Whole-House Air Cleaner will be accomplished when your thermostat is set for continuous air circulation ("Fan On"). If continuous air cleaning is not required, or desired, set your thermostat to "Fan Auto".

[1] *Performance results based on controlled testing in accordance with ASHRAE 52.2 2017 test procedure against other leading brands. Comparative results may vary depending on system conditions and application.*

Maintenance

Regular replacement of the filter is very important to keeping your HVAC system clean and preventing damage to it. For effective whole-home air purification, your AprilAire Air Cleaner requires genuine AprilAire Replacement Filters.

AprilAire recommends replacing your filter every 6-12 months depending on the filter model. Your contractor may recommend more frequent filter replacement depending on HVAC system operation time and the amount of people in the home and their activities. The size of the home, amount of carpet, number of pets or smokers, and pollution level in your area all may contribute to your maintenance schedule.

CHANGING THE FILTERS

Replace the filter with genuine AprilAire Filters designed for your AprilAire Air Cleaner. **IMPORTANT:** Follow the step by step directions on the filter carton.

The model number of your replacement filter can be found on the label inside of the air cleaner door (see **FIGURE 12**).

IMPORTANT: Turn the thermostat mode to off and the fan to auto before removing air cleaner door.

FIGURE 12

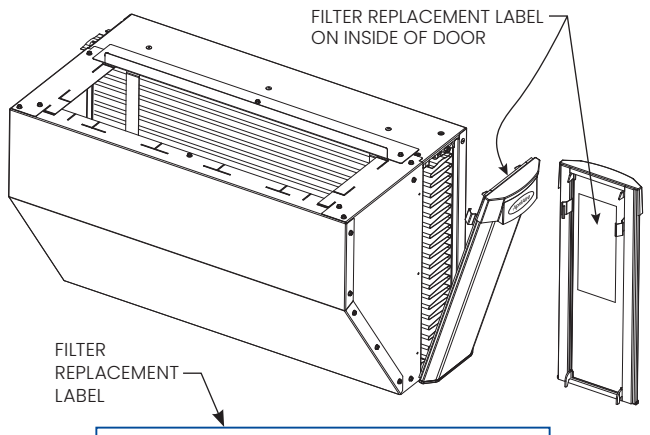

AprilAire Healthy Air

ONLY USE GENUINE AprilAire REPLACEMENT PARTS

Install only genuine replacement AprilAire Air Filters to maintain peak performance.

AIR PURIFIER MODEL	U###
REPLACEMENT FILTER (Other MERV filter options available)	3F###

Learn More About Your Product

Download the AprilAire Healthy Air App, find replacement filters, view technical information, and more.

aprilaire.com

Limited Warranty

Terms of Coverage

Your AprilAire® Air Cleaner is expressly warranted to be free from defects in materials or workmanship for ten (10) years from date of purchase.

What Is Covered

The exclusive obligation of AprilAire under this Limited Warranty shall be, at the sole discretion of AprilAire, to supply, without charge, a replacement for any component or product which is found to be defective. A defective part will be replaced pursuant to this Limited Warranty with a genuine AprilAire part. A defective product will be replaced pursuant to this Limited Warranty with a new AprilAire product of equal or similar features and functionality if the original product has been discontinued or is no longer available.

Not Covered by the Limited Warranty

- Consumable or maintenance products, such as, but not limited to: Air Filters, Evaporative Humidifier Water Panels, Steam Canisters, or Steam Humidifier Electrode Wires.
- Products purchased from third parties that were previously used, such as previously-used products purchased from eBay, similar third party/auction sites, or individuals selling used products.
- Labor charges, shipping costs, removal fees, service fees, or reinstallation costs.
- Materials furnished by the installer.
- Damage caused by misuse, abuse, improper installation, or failing to install, use, or maintain the product in accordance with the instructions provided.
- Damage to HVAC equipment caused by improper installation(s) or misapplication installation(s).
- Modifications, changes, repurposing, or alterations to the AprilAire product.
- Extended warranties or satisfaction guarantees offered by third parties.
- Cosmetic damage or normal wear and tear, including, but not limited to: scratches, peeling finish, or dents that do not impede the mechanical functionality of the product.
- Damage caused by acts of nature, including but not limited to: fire, collision, flood, wind, power surge, lighting strike, or mold.
- Damage caused during transit.
- Damage caused during installation due to failure to follow local, state, or federal laws, statutes, codes, or ordinances.
- Damage caused by defects in materials furnished by the installer.

Limit of Liability

IMPLIED WARRANTIES OF MERCHANTABILITY OR FITNESS FOR A PARTICULAR PURPOSE SHALL BE LIMITED IN DURATION TO THE AFOREMENTIONED EXPRESS WARRANTY PERIOD. APRILAIRE LIABILITY FOR INCIDENTAL OR CONSEQUENTIAL DAMAGES, OTHER THAN DAMAGES FOR PERSONAL INJURIES, RESULTING FROM ANY BREACH OF THE AFOREMENTIONED IMPLIED WARRANTIES OR THE ABOVE LIMITED WARRANTY IS EXPRESSLY EXCLUDED. THIS LIMITED WARRANTY IS VOID IF DEFECT(S) RESULT(S) FROM FAILURE TO INSTALL THE PRODUCT ACCORDING TO THE APRILAIRE INSTALLATION INSTRUCTIONS. IF THE LIMITED WARRANTY IS VOID DUE TO MISAPPLICATION OR IMPROPER INSTALLATION, ALL DISCLAIMERS OF IMPLIED WARRANTIES SHALL BE EFFECTIVE UPON INSTALLATION.

Some states do not allow limitations on how long an implied warranty lasts or the exclusion or limitation of incidental or consequential damages, so the above limitation(s) may not apply to your situation. This Limited Warranty gives you specific legal rights, and you may also have other rights which vary from state to state.

Register Your AprilAire® Product

Thank you for choosing AprilAire. Register your product at **aprilaire.com/warranty** to receive important updates and notifications, and to streamline the process in the unlikely event you file a claim.

Your warranty registration information will not be sold or shared outside of this company.

Make a Warranty Claim

For questions regarding the Limited Warranty or to initiate a claim, contact AprilAire Customer Service at 1.800.334.6011 Monday through Friday, 7:00 a.m. to 5:00 p.m. Central Time.

At the sole discretion of AprilAire, you may be required to: return the product not later than thirty (30) days after the warranty period to the place of purchase or (if directed) to AprilAire, contact a professional contractor to provide warranty service, submit a product for testing related to a warranty claim, and/or send pictures of the original product with the serial number (if applicable) to AprilAire Technical Support for inspection as a condition to reviewing a claim and/or receiving a replacement product under this Limited Warranty.

AprilAire® is a registered trademark and division of Research Products Corporation, P.O. Box 1467, Madison, WI 53701-1467 USA.

10023442A • 07.26
© 2026 AprilAire | aprilairepartners.com | 800.334.6011
AprilAire reserves the right to change specifications without notice.