Elate® | K-TLS35327-4

Rite-Temp® bath and shower trim kit with push-button diverter, without showerhead

Features

- A single handle controls both on/off activation and temperature setting
- Integrated push-button diverter
- Box includes: Faceplate with lever handle and diverter, shower arm with flange, bath spout
- Showerhead sold separately
- Coordinates with other products in the Elate collection

Available Colors/Finishes

Color tiles intended for reference only.

- CP Polished Chrome
- BN Vibrant Brushed Nickel
- BL Matte Black
- 2MB Vibrant Brushed Moderne Brass

1-800-4KOHLER (1-800-456-4537)
Kohler Co. reserves the right to make revisions without notice to product specifications.
For the most current specification sheet, go to www.kohler.com USA or www.kohler.ca Canada.
5-12-2026 23:22 - US-CA

Codes/Standards

ASME A112.18.1/CSA B125.1

Technical Information

All product dimensions are nominal.

Handle

Handle Style/ Type:	Lever

Spout

Spout Reach:	5" (127 mm)

Valves

Required Valves:	Diverter, Pressure Balance

Material

- Premium material construction with metal handle ensures reliability and durability
- KOHLER finishes resist corrosion and tarnishing

Required Products/Accessories

- K-11748 Series Rite-Temp® Valves

Warranty

See website for detailed warranty information.

KOHLER® Faucet Lifetime Limited Warranty

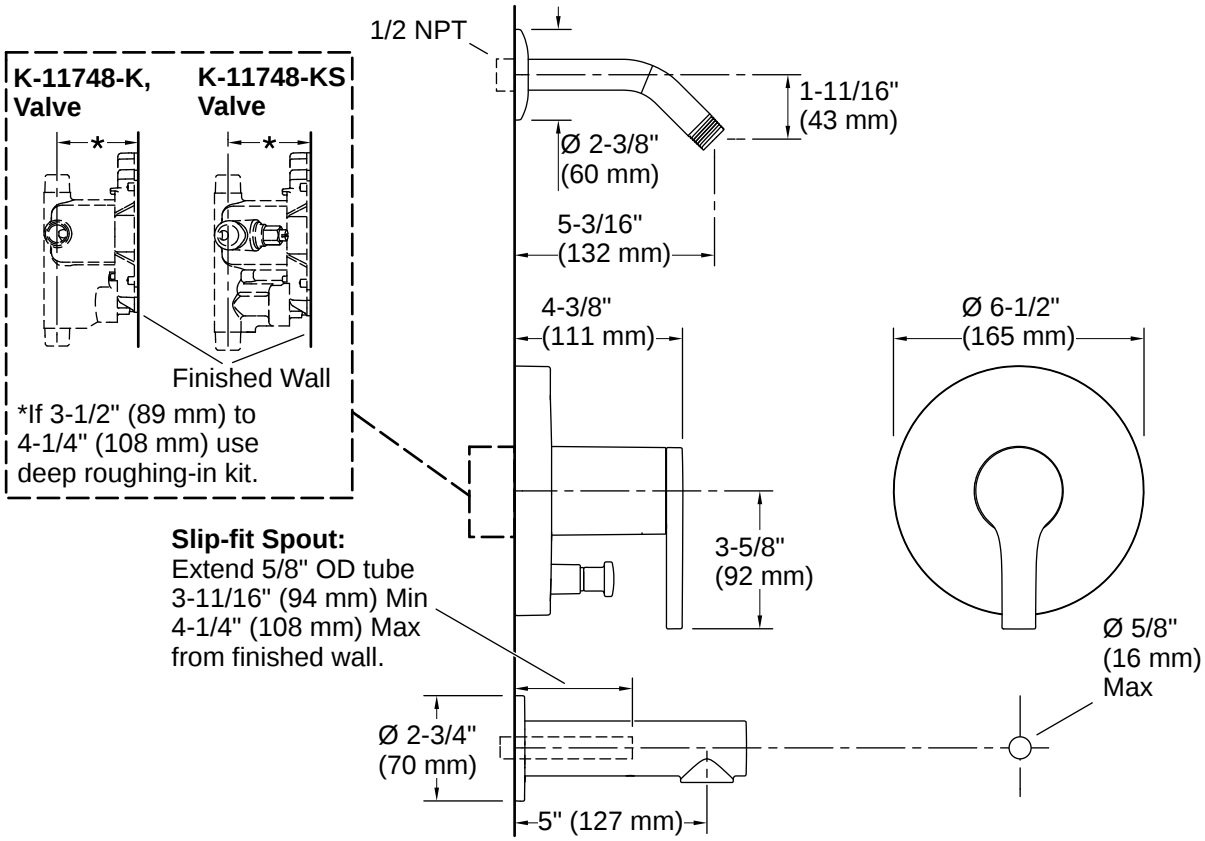

Installation

- Trim only; requires valve to complete installation (sold separately)

Installation Notes

Install this product according to the installation instructions.

Avoid cross-flow conditions. Do not install a shut-off device on either valve outlet.
Install straight pipe or tube drop of 7" (178 mm) to 18" (457 mm) with single elbow between the valve and the wall-mount spout.

1-800-4KOHLER (1-800-456-4537)
Kohler Co. reserves the right to make revisions without notice to product specifications.
For the most current specification sheet, go to www.kohler.com USA or www.kohler.ca Canada.
5-12-2026 23:22 - US-CA

THE BOLD LOOK OF KOHLER